FARMGARD

ROBUST **MACHINERY** THAT WORKS

# HV-HF / HFF

## CELLI SPARE PARTS REFERENCE GUIDE

AUTOMATIC SIDE SHIFT ROTARY HOE / SPIKES ROTOR

CELLI

136419000100

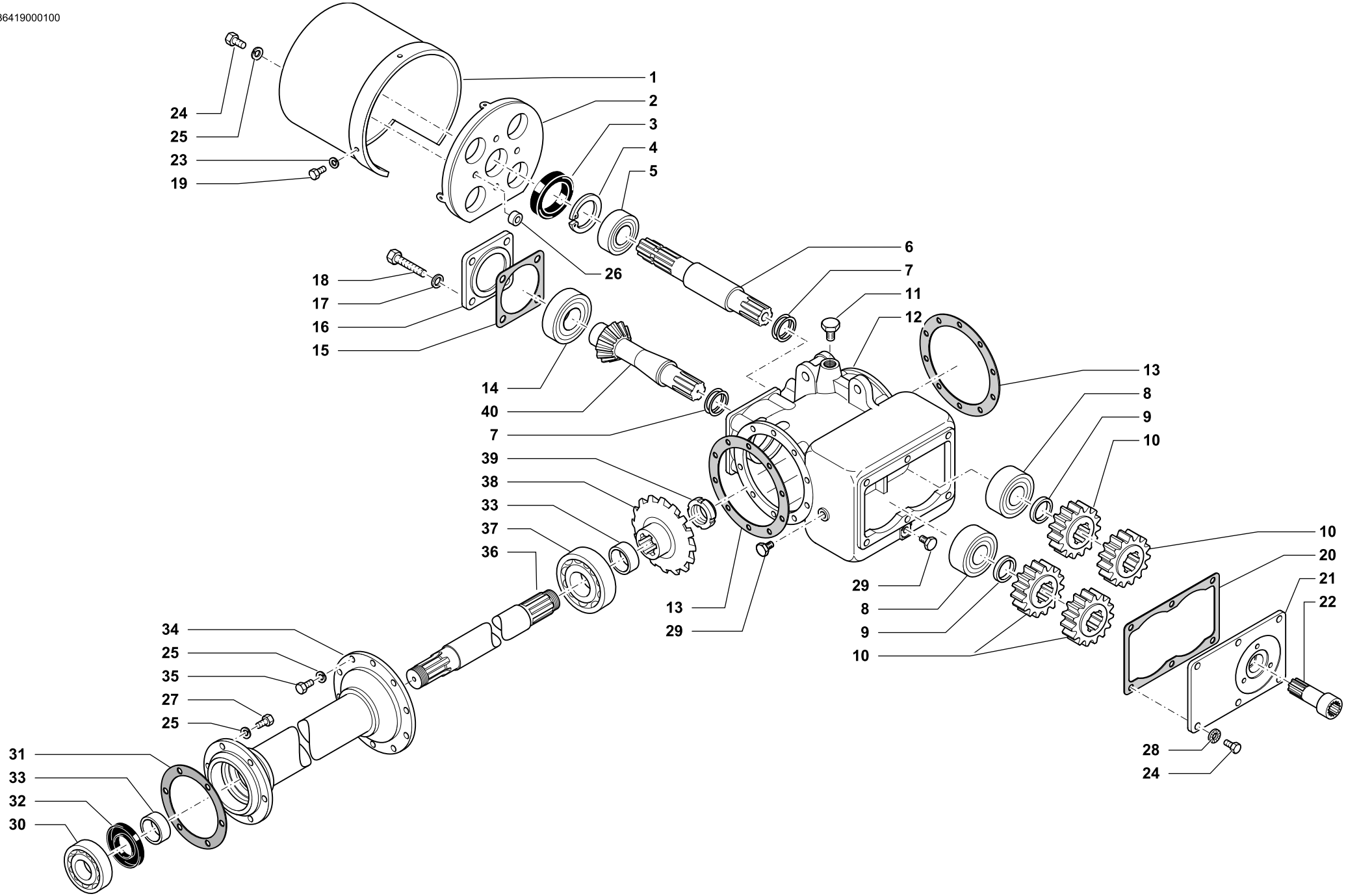


CELLI

**SCATOLA CAMBIO 4 VELOCITÀ 540G/M • 4 SPEED GEARBOX 540G/M**
**GETRIEBEGEHAUSE 4 GESCHW. 540G/M • BÔITE 4 VITESSES 540G/M**

| Tav. Tab. Taf. | Rev. | |
|---|---|---|
| 136419 | 01 | 0208 |

| RIF. | N. CODICE | DENOMINAZIONE | DENOMINATION | BEZEICHNUNG | DENOMINATION |
|---|---|---|---|---|---|
| 1 | 124507 | Cuffia protezione frizione | Guard | Schütz | Protection |
| 2 | 161501 | Supporto portacuffia | Support | Halterung | Support |
| 3 | 007028 | Paraolio | Oil seal | Simmerring | Joint d' huile |
| 4 | 001006 | Anello di arresto | Stop ring | Sperring | Bague d'arret |
| 5 | 003001 | Cuscinetto | Bearing | Kugellager | Roulement |
| 6 | 323645 | Albero PDF con attacco pompa | Shaft | Welle | Arbre |
| 7 | 311514 | Serie spessori | Set spacers | Beilagscheiben | Serie d'epaisseures |
| 8 | 003023 | Cuscinetto | Bearing | Kugellager | Roulement |
| 9 | 323520 | Distanziale | Spacer | Distanzstueck | Entretoise |
| 10 | 323628 | Ingranaggio cambio Z 16 | Gear | Zanhrad | Engrenage |
| | 323629 | Ingranaggio cambio Z 17 | Gear | Zanhrad | Engrenage |
| | 323630 | Ingranaggio cambio Z 18 | Gear | Zanhrad | Engrenage |
| | 323631 | Ingranaggio cambio Z 19 | Gear | Zanhrad | Engrenage |
| | 323625 | Ingranaggio cambio speciale Z 13 | Gear | Zanhrad | Engrenage |
| | 323626 | Ingranaggio cambio speciale Z 14 | Gear | Zanhrad | Engrenage |
| | 323633 | Ingranaggio cambio speciale Z 21 | Gear | Zanhrad | Engrenage |
| | 323634 | Ingranaggio cambio speciale Z 22 | Gear | Zanhrad | Engrenage |
| 11 | 022010 | Tappo con sfiato | Plug | Verschluss | Bouchon |
| 12 | 321528 | Scatola cambio HF | Housing | Gehäeuse | Bôite |
| 13 | 324510 | Guarnizione campana scatola | Gasket | Dichtring | Joint |
| 14 | 003022 | Cuscinetto | Bearing | Kugellager | Roulement |
| 15 | 324501 | Guarnizione coperchio quadro | Gasket | Dichtring | Joint |
| 16 | 321531 | Coperchio anteriore scatola | Cover | Deckel | Couvercle |
| 17 | 011003 | Grower | Grower | Federscheibe | Grower |
| 18 | 014010 | Vite | Screw | Schraube | Vis |
| 19 | 014284 | Vite | Screw | Schraube | Vis |
| 20 | 324516 | Guarnizione coperchio cambio | Gasket | Dichtring | Joint |
| 21 | 321533 | Coperchio cambio | Cover | Deckel | Couvercle |
| 22 | 323646 | Albero collegamento pompa | Shaft | Welle | Arbre |
| 23 | 010023 | Rondella | Washer | Unterlegscheibe | Rondelle |
| 24 | 014007 | Vite | Screw | Schraube | Vis |
| 25 | 011002 | Grower | Grower | Federscheibe | Grower |
| 26 | 323644 | Distanziale per protezione frizione | Spacer | Distanzstueck | Entretoise |

| RIF. | N. CODICE | DENOMINAZIONE | DENOMINATION | BEZEICHNUNG | DENOMINATION |
|---|---|---|---|---|---|
| 27 | 014149 | Vite | Screw | Schraube | Vis |
| 28 | 011012 | Rosetta ondulata | Washer | Unterlegscheibe | Rondelle |
| 29 | 022060 | Tappo conico | Plug | Verschluss | Bouchon |
| 30 | 003097S | Cuscinetto | Bearing | Kugellager | Roulement |
| 31 | 324511 | Guarnizione campana carter | Gasket | Dichtring | Joint |
| 32 | 007042 | Paraolio | Oil seal | Simmerring | Joint d' huile |
| 33 | 323538 | Anello distanziale | Spacer | Distanzstueck | Entretoise |
| 34 | 361883 | Distanziale L=442 | Spacer | Distanzstueck | Entretoise |
| | 361884 | Distanziale L=567 | Spacer | Distanzstueck | Entretoise |
| | 361885 | Distanziale L=692 | Spacer | Distanzstueck | Entretoise |
| | 361886 | Distanziale L=817 | Spacer | Distanzstueck | Entretoise |
| 35 | 014007 | Vite | Screw | Schraube | Vis |
| 36 | 323528 | Semiasse L=380 | Axle shaft | Achswelle | Demi-axe |
| | 323650 | Semiasse L=170 | Axle shaft | Achswelle | Demi-axe |
| | 323651 | Semiasse L=295 | Axle shaft | Achswelle | Demi-axe |
| | 323652 | Semiasse L=420 | Axle shaft | Achswelle | Demi-axe |
| | 323653 | Semiasse L=545 | Axle shaft | Achswelle | Demi-axe |
| | 323654 | Semiasse L=670 | Axle shaft | Achswelle | Demi-axe |
| | 323655 | Semiasse L=795 | Axle shaft | Achswelle | Demi-axe |
| | 323656 | Semiasse L=920 | Axle shaft | Achswelle | Demi-axe |
| 37 | 003028 | Cuscinetto | Bearing | Kugellager | Roulement |
| 38 | 322503 | Corona conica | Crownwheel | Zahnkranz | Couronne |
| 39 | 005007 | Ghiera autobloccante | Ring nut | Nutmutter | Collier |
| 40 | 322502 | Albero pignone scatola cambio | Shaft | Welle | Arbre |

136418000100

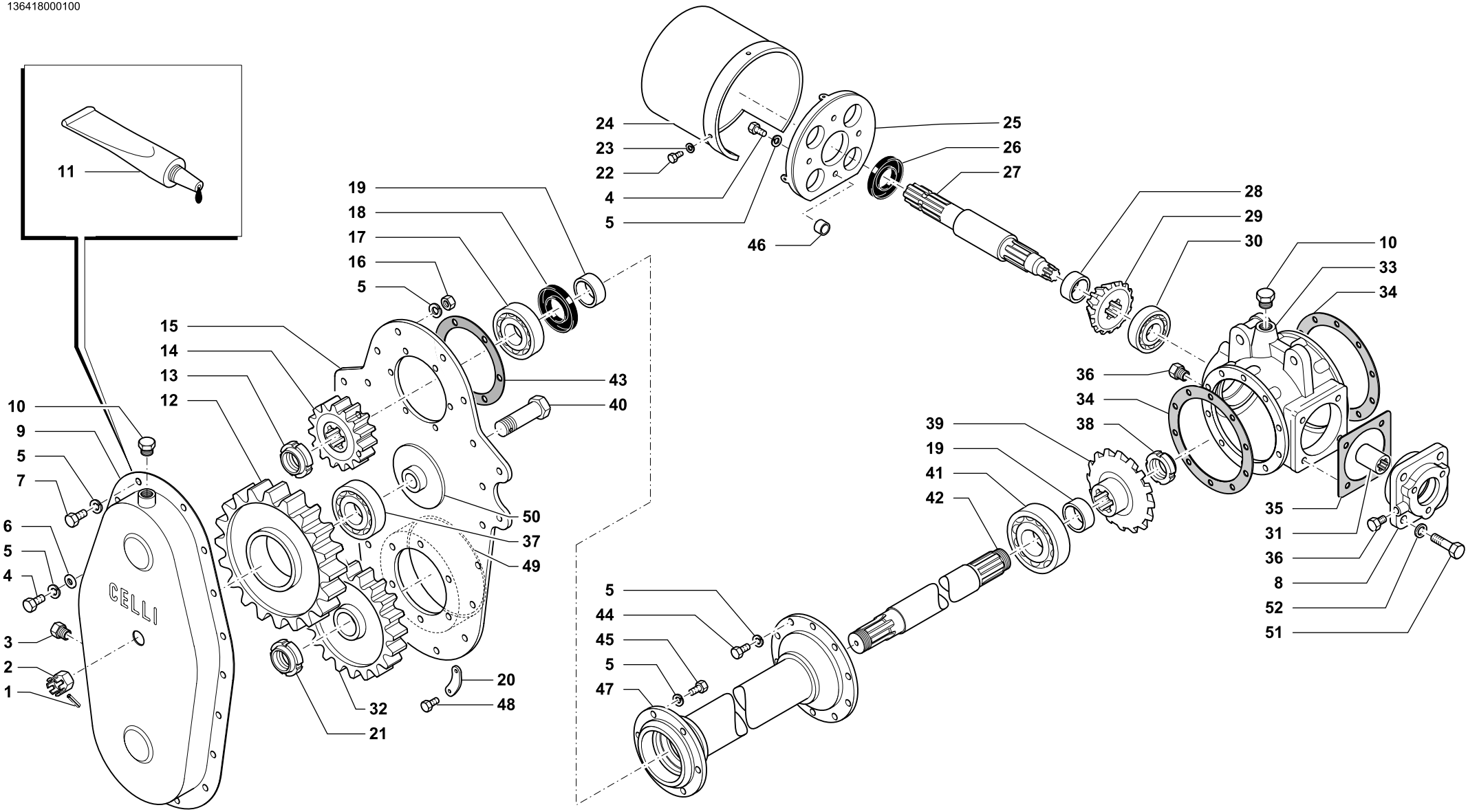


**TRASMISSIONE • TRANSMISSION**
**UBERTRAGUNG • TRANSMISSION**

| Tav. Tab. Taf. | Rev. | |
|---|---|---|
| 136418 | 00 | 0100 |

| RIF. | N. CODICE | DENOMINAZIONE | DENOMINATION | BEZEICHNUNG | DENOMINATION |
|---|---|---|---|---|---|
| 1 | 002005 | Spina elastica | Pin | Stift | Goupille |
| | 013020 | Spina elastica | Pin | Stift | Goupille |
| 2 | 004006 | Dado a corona | Nut | Mutter | Ecrou |
| 3 | 022018 | Tappo | Plug | Verschluss | Bouchon |
| 4 | 014278 | Vite | Screw | Schraube | Vis |
| 5 | 011002 | Grower | Grower | Federscheibe | Grower |
| 6 | 010004 | Rondella | Washer | Unterlegscheibe | Rondelle |
| 7 | 014007 | Vite | Screw | Schraube | Vis |
| 8 | 321527 | Supporto attacco pompa | Support | Halterung | Suppor |
| 9 | 361516 | Coperchio carter | Cover | Deckel | Couvercle |
| 10 | 022010 | Tappo | Plug | Verschluss | Bouchon |
| 11 | 094006 | Sigillante | Glue | Klebstoff | Colle |
| 12 | 322507 | Ingranaggio centrale | Gear | Zanhrad | Engrenage |
| 13 | 005007 | Ghiera autobloccante | Ring nut | Nutmutter | Collier |
| 14 | 323539 | Ingranaggio superiore | Gear | Zanhrad | Engrenage |
| 15 | 361658 | Laterale sinistro | L.H. side shield | L.H. seitlicher schild | Joue gauche |
| 16 | 004057 | Dado | Nut | Mutter | Ecrou |
| 17 | 003097 | Cuscinetto | Bearing | Kugellager | Roulement |
| 18 | 007042 | Paraolio | Oil seal | Simmerring | Joint d’ huile |
| 19 | 323538 | Distanziale | Spacer | Distanzstueck | Entretoise |
| 20 | 311510 | Rosette di sicurezza | Washer | Unterlegscheibe | Rondelle |
| 21 | 005008 | Ghiera autobloccante | Ring nut | Nutmutter | Collier |
| 22 | 014284 | Vite | Screw | Schraube | Vis |
| 23 | 010023 | Rondella | Washer | Unterlegscheibe | Rondelle |
| 24 | 124507 | Cuffia posteriore frizione HF | Guard | Schütz | Protection |
| 25 | 161501 | Supporto portacuffia | Support | Halterung | Support |
| 26 | 007028 | Paraolio | Oil seal | Simmerring | Joint d’ huile |
| 27 | 323600 | Albero portapignone HF | Shaft | Welle | Arbre |
| 28 | 323553 | Distanziale | Spacer | Distanzstueck | Entretoise |
| 29 | 323502 | Ingranaggio conico Z=15 | Gear | Zanhrad | Engrenage |
| 30 | 003040 | Cuscinetto | Bearing | Kugellager | Roulement |
| 31 | 323601 | Manicotto collegamento pompa | Pump connecting sleeve | Pumpenverbindugsmuffe | Manchon raccord pompe |
| 32 | 322508 | Ingranaggio inferiore | Gear | Zanhrad | Engrenage |

| RIF. | N. CODICE | DENOMINAZIONE | DENOMINATION | BEZEICHNUNG | DENOMINATION |
|---|---|---|---|---|---|
| 33 | 321501 | Scatola normale | Housing | Gehäeuse | Bôite |
| 34 | 324510 | Guarnizione | Gasket | Dichtring | Joint |
| 35 | 324501 | Guarnizione coperchio quadro | Gasket | Dichtring | Joint |
| 36 | 022060 | Tappo conico | Plug | Verschluss | Bouchon |
| 37 | 003008 | Cuscinetto | Bearing | Kugellager | Roulement |
| 38 | 005007 | Ghiera autobloccante | Ring nut | Nutmutter | Collier |
| 39 | 322503 | Corona | Crown wheel | Tellerad | Pinion conique |
| 40 | 323540 | Perno centrale | Pivot | Bolzen | Axe |
| 41 | 003028 | Cuscinetto | Bearing | Kugellager | Roulement |
| 42 | 323526 | Semiasse L=205 | Axle shaft | Achswelle | Demi-axe |
| | 323528 | Semiasse L=330 | Axle shaft | Achswelle | Demi-axe |
| | 323529 | Semiasse L=465 | Axle shaft | Achswelle | Demi-axe |
| | 323530 | Semiasse L=505 | Axle shaft | Achswelle | Demi-axe |
| | 323532 | Semiasse L=630 | Axle shaft | Achswelle | Demi-axe |
| | 323534 | Semiasse L=755 | Axle shaft | Achswelle | Demi-axe |
| | 323536 | Semiasse L=880 | Axle shaft | Achswelle | Demi-axe |
| | 323597 | Semiasse L=1005 | Axle shaft | Achswelle | Demi-axe |
| 43 | 324511 | Guarnizione campana carter | Gasket | Dichtring | Joint |
| 44 | 014007 | Vite | Screw | Schraube | Vis |
| 45 | 014149 | Vite | Screw | Schraube | Vis |
| 46 | 323644 | Distanziale | Spacer | Distanzstueck | Entretoise |
| 47 | 361503 | Distanziale L=152 | Spacer | Distanzstueck | Entretoise |
| | 361505 | Distanziale L=277 | Spacer | Distanzstueck | Entretoise |
| | 361506 | Distanziale L=362 | Spacer | Distanzstueck | Entretoise |
| | 361507 | Distanziale L=402 | Spacer | Distanzstueck | Entretoise |
| | 361509 | Distanziale L=527 | Spacer | Distanzstueck | Entretoise |
| | 361511 | Distanziale L=652 | Spacer | Distanzstueck | Entretoise |
| | 361513 | Distanziale L=777 | Spacer | Distanzstueck | Entretoise |
| | 361696 | Distanziale L=902 | Spacer | Distanzstueck | Entretoise |
| 48 | 014205 | Vite | Screw | Schraube | Vis |
| 49 | 323202 | Anello raschiaerba (a saldare) | Grass scraper ring (to be welded) | Grasschabring (zum schweissen) | Anneau (à souder) |
| 50 | 322509 | Supporto ingranaggio centrale | Central gear housing | Gehäuse für Mittelzahnrad | Support engranage central |
| 51 | 014010 | Vite | Screw | Schraube | Vis |
| 52 | 011033 | Grower | Grower | Federscheibe | Grower |

136322010208

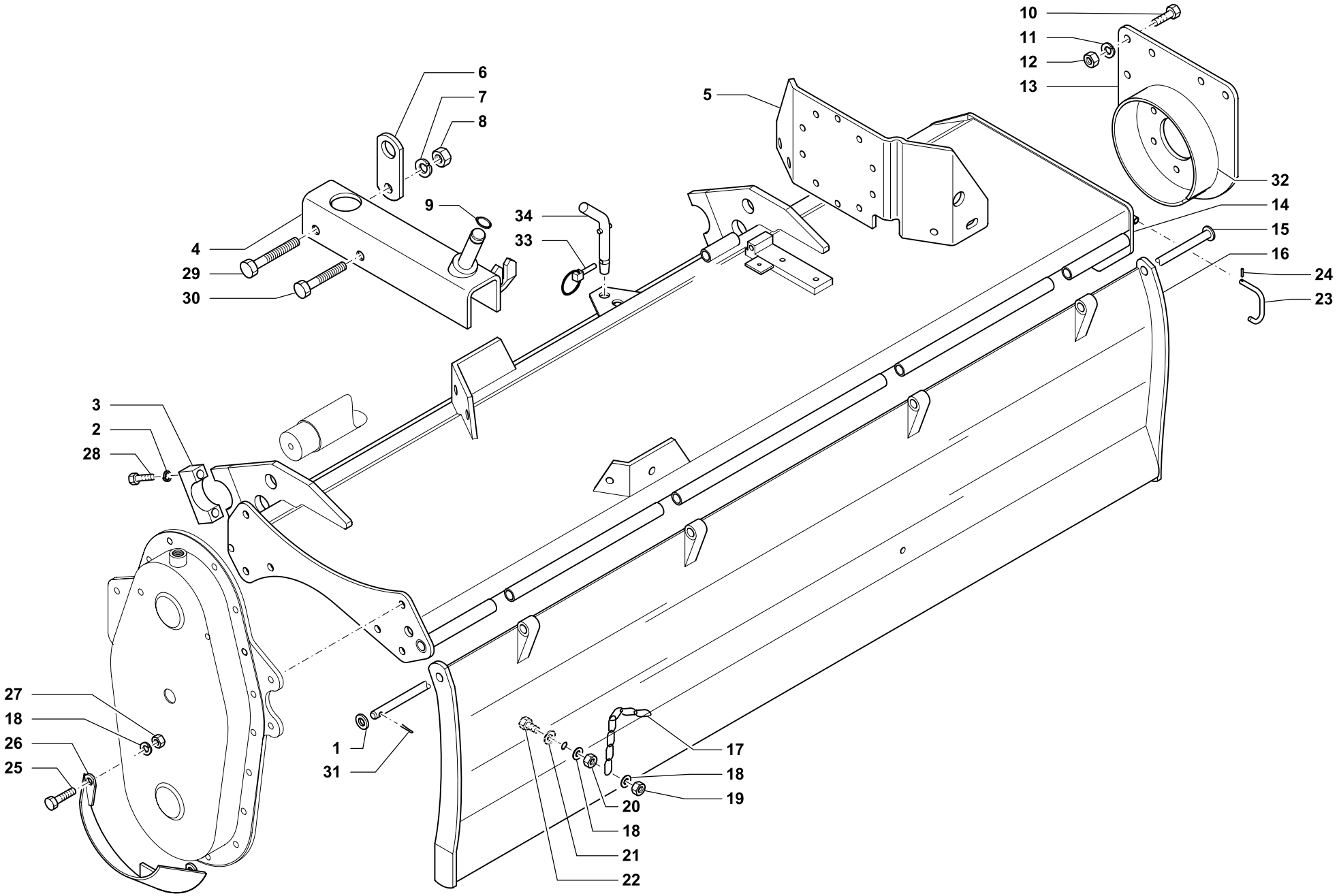


**TELAIO • FRAME**
**RAHMEN • CHASSIS**

| Tav. Tab. Taf. | Rev. | |
|---|---|---|
| **136322** | **01** | **0208** |

| | RIF. | N. CODICE | DENOMINAZIONE | DENOMINATION | BEZEICHNUNG | DENOMINATION |
|---|---|---|---|---|---|---|
| | 1 | 010005 | Rondella | Washer | Scheibe | Rondelle |
| | 2 | 011004 | Grower | Grower | Federscheibe | Grower |
| | 3 | 323660 | Morsetto per asta | Rod clamp | Klemme für Stange | Bague de tige |
| | 4 | 361742 | Supporto tirante (scatola 1V) | Tie rod housing | Zugspindelhalterung | Support tirant |
| | | 361076 | Supporto tirante (scatola 4V) | Tie rod housing | Zugspindelhalterung | Support tirant |
| | 5 | 312680 | Piastra scatola cambio | Gearbox housing plate | Platte für Getriebekasten | Plaque boite à vitesses |
| | 6 | 323620 | Piastra di aggancio | Hook plate | Platte für Haken | Plaque d'accrochage |
| | 7 | 011005 | Grower | Grower | Federscheibe | Grower |
| | 8 | 004063 | Dado | Nut | Mutter | Ecrou |
| | 9 | 001016 | Anello arresto | Stop ring | Sperring | Bague d'arret |
| | 10 | 014213 | Vite | Screw | Schraube | Vis |
| | 11 | 011003 | Grower | Grower | Federscheibe | Grower |
| | 12 | 004030 | Dado | Nut | Mutter | Ecrou |
| | 13 | 361727 | Laterale destro | R.H. panel | Seitenblech | Lateral droite |
| HV 135 | 14 | 361750 | Telaio | Frame | Rahmen | Châssis |
| HV 160 | | 361751 | Telaio | Frame | Rahmen | Châssis |
| HV 185 | | 361752 | Telaio | Frame | Rahmen | Châssis |
| HV 205 | | 361753 | Telaio | Frame | Rahmen | Châssis |
| HV 230 | | 361755 | Telaio | Frame | Rahmen | Châssis |
| HF 135 | | 361757 | Telaio | Frame | Rahmen | Châssis |
| HF 160 | | 361758 | Telaio | Frame | Rahmen | Châssis |
| HF 185 | | 361759 | Telaio | Frame | Rahmen | Châssis |
| HF 205 | | 362507 | Telaio | Frame | Rahmen | Châssis |
| HF 230 | | 362510 | Telaio | Frame | Rahmen | Châssis |
| HFF135 | | 361764 | Telaio | Frame | Rahmen | Châssis |
| HFF160 | | 361765 | Telaio | Frame | Rahmen | Châssis |
| HFF185 | | 362505 | Telaio | Frame | Rahmen | Châssis |
| HFF205 | | 362508 | Telaio | Frame | Rahmen | Châssis |
| HFF230 | | 362511 | Telaio | Frame | Rahmen | Châssis |
| 135 | 15 | 361982 | Perno ventola | Pivot | Bolzen | Axe |
| 160 | | 361984 | Perno ventola | Pivot | Bolzen | Axe |
| 185 | | 361986 | Perno ventola | Pivot | Bolzen | Axe |
| 205 | | 361987 | Perno ventola | Pivot | Bolzen | Axe |
| 230 | | 361988 | Perno ventola | Pivot | Bolzen | Axe |

| | RIF. | N. CODICE | DENOMINAZIONE | DENOMINATION | BEZEICHNUNG | DENOMINATION |
|---|---|---|---|---|---|---|
| 135 | 16 | 361589 | Scudo mobile | Rear shield | Bodenklappe | Tablier arriere |
| 160 | | 361590 | Scudo mobile | Rear shield | Bodenklappe | Tablier arriere |
| 185 | | 361591 | Scudo mobile | Rear shield | Bodenklappe | Tablier arriere |
| 205 | | 361713 | Scudo mobile | Rear shield | Bodenklappe | Tablier arriere |
| 230 | | 361930 | Scudo mobile | Rear shield | Bodenklappe | Tablier arriere |
| | 17 | 523616 | Attacco ventola | Tailgate hitch | Anhängung für Klappe | Fixation tablier |
| | | 009021 | Catena | Chain | Kette | Chaine |
| | 18 | 011002 | Grower | Grower | Federscheibe | Grower |
| | | 010004 | Rondella | Washer | Scheibe | Rondelle |
| | 19 | 004002 | Dado | Nut | Mutter | Ecrou |
| | | 004084 | Dado | Nut | Mutter | Ecrou |
| | 20 | 004058 | Dado | Nut | Mutter | Ecrou |
| | 21 | 010021 | Rondella | Washer | Scheibe | Rondelle |
| | 22 | 014291 | Vite | Screw | Schraube | Vis |
| | 23 | 323619 | Gancio tastatore | Feeler hook | Fühlerfeststellhaken | Crochet palpeur |
| | 24 | 013036 | Spina elastica | Pin | Stift | Goupille |
| | 25 | 014008 | Vite | Screw | Schraube | Vis |
| | 26 | 361064 | Protezione carter | Protection | Schuetz | Protection |
| | 27 | 004057 | Dado | Nut | Mutter | Ecrou |
| | 28 | 014126 | Vite | Screw | Schraube | Vis |
| | 29 | 014182 | Vite | Screw | Schraube | Vis |
| | 30 | 014127 | Vite | Screw | Schraube | Vis |
| | 31 | 002013 | Copiglia | Split pin | Splint | Goupille |
| | 32 | 323202 | Anello raschiaerba (a saldare) | Grass scraper ring (to be welded) | Grasschabring (zum schweissen) | Anneau (à souder) |
| | 33 | 013023 | Spina a scatto | Pin | Stift | Goupille |
| HF-HFF | 34 | 223522 | Perno | Pivot | Bolzen | Axe |
| HV | | 323677 | Perno | Pivot | Bolzen | Axe |

136329000300

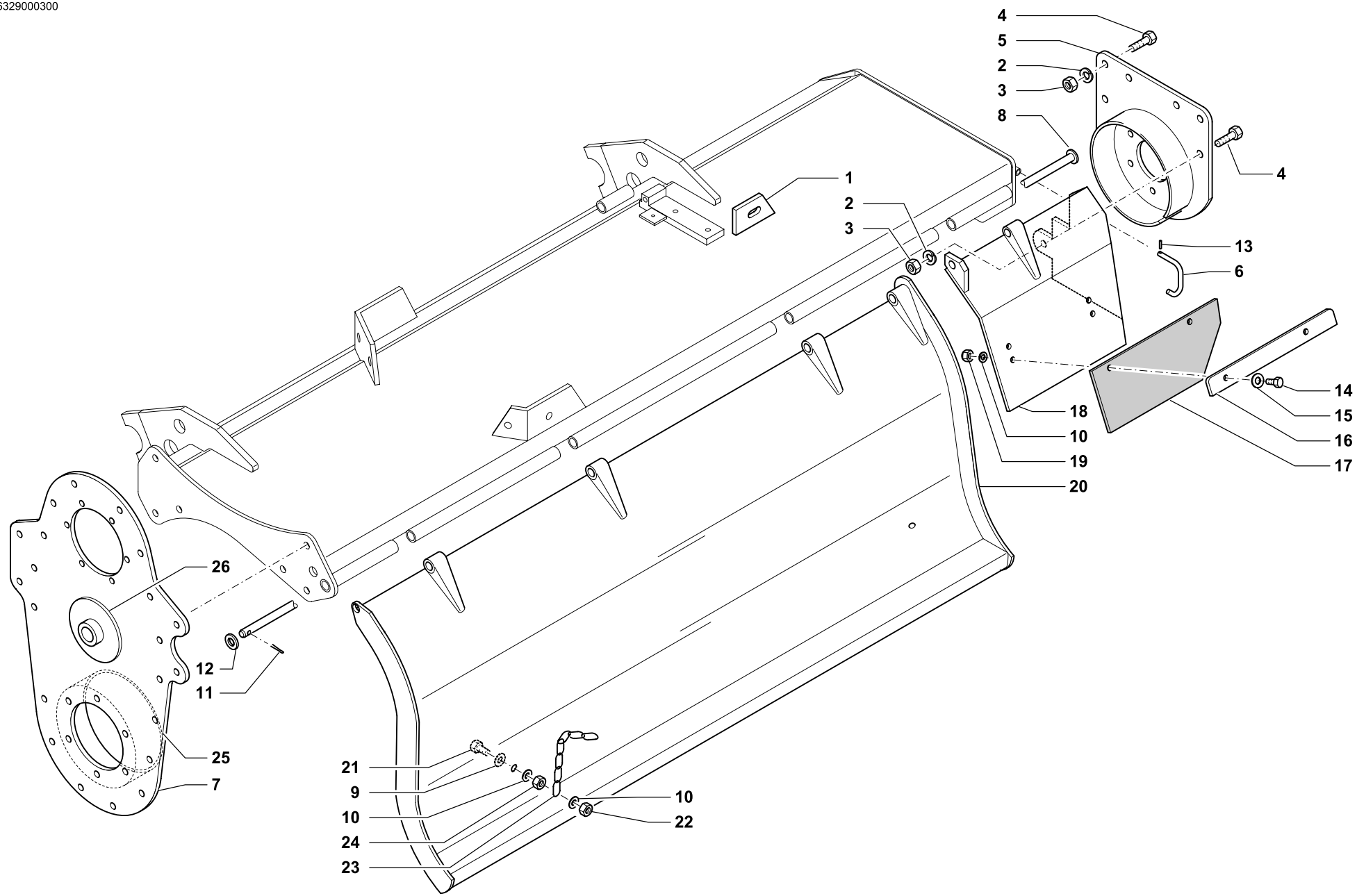


**TELAIO SPECIALE • SPECIAL FRAME**
**SONDERRAHMEN • CHASSIS SPECIAL**

| Tav. Tab. Taf. | 136329 | Rev. 00 | 0300 |
|---|---|---|---|

| | RIF. | N. CODICE | DENOMINAZIONE | DENOMINATION | BEZEICHNUNG | DENOMINATION |
|---|---|---|---|---|---|---|
| | 1 | 323341 | Piatto superiore | Upper plate | Obere Platte | Plat suppèrieur (boite à vitesses) |
| | 2 | 011003 | Grower | Grower | Federscheibe | Grower |
| | 3 | 004030 | Dado | Nut | Mutter | Ecrou |
| | 4 | 014213 | Vite | Screw | Schraube | Vis |
| | 5 | 361727 | Laterale destro | R.H. panel | Seitenblech | Lateral droite |
| | 6 | 323619 | Gancio tastatore | Feeler hook | Fühlerfeststellhaken | Crochet palpeur |
| | 7 | 361658 | Laterale sinistro | L.H. panel | Seitenblech | Lateral gauche |
| 135 | 8 | 361562 | Perno ventola | Pivot | Bolzen | Axe |
| 160 | | 361563 | Perno ventola | Pivot | Bolzen | Axe |
| 185 | | 361564 | Perno ventola | Pivot | Bolzen | Axe |
| 205 | | 361703 | Perno ventola | Pivot | Bolzen | Axe |
| 230 | | 361814 | Perno ventola | Pivot | Bolzen | Axe |
| | 9 | 010021 | Rondella | Washer | Scheibe | Rondelle |
| | 10 | 011002 | Grower | Grower | Federscheibe | Grower |
| | 11 | 002013 | Copiglia | Split pin | Splint | Goupille |
| | 12 | 010005 | Rondella | Washer | Scheibe | Rondelle |
| | 13 | 013036 | Spina elastica | Pin | Holstift | Axe |
| | 14 | 014218 | Vite | Screw | Schraube | Vis |
| | 15 | 010004 | Rondella | Washer | Scheibe | Rondelle |
| | 16 | 323648 | Piatto per ventola in gomma | Rubber flap plate | Platte für Gummiklappe | Plat pour tablier en caoutchouc |
| | 17 | 099032 | Ventola in gomma | Rubber flap | Gummiklappe | Tablier en caoutchouc |
| | 18 | 361910 | Supporto per ventola in gomma | Rubber flap housing | Gummiklappengehäuse | Support tablier en caoutchouc |
| | 19 | 004058 | Dado | Nut | Mutter | Ecrou |
| 135 | 20 | 361900 | Ventola | Rear flap | Blech | Tablier arriere |
| 160 | | 361901 | Ventola | Rear flap | Blech | Tablier arriere |
| 185 | | 361902 | Ventola | Rear flap | Blech | Tablier arriere |
| 205 | | 361903 | Ventola | Rear flap | Blech | Tablier arriere |
| 230 | | 361904 | Ventola | Rear flap | Blech | Tablier arriere |
| | 21 | 014291 | Vite | Screw | Schraube | Vis |
| | 22 | 004002 | Dado | Nut | Mutter | Ecrou |
| | 23 | 009021 | Catena | Chain | Kette | Chaine |
| | 24 | 004058 | Dado | Nut | Mutter | Ecrou |
| | 25 | 323202 | Anello raschiaerba (a saldare) | Grass scraper ring (to be welded) | Grasschabring (zum schweissen) | Anneau (à souder) |
| | 26 | 322509 | Supporto ingranaggio centrale | Central gear housing | Gehäuse für Mittelzahnrad | Support engranage central |

136328020208

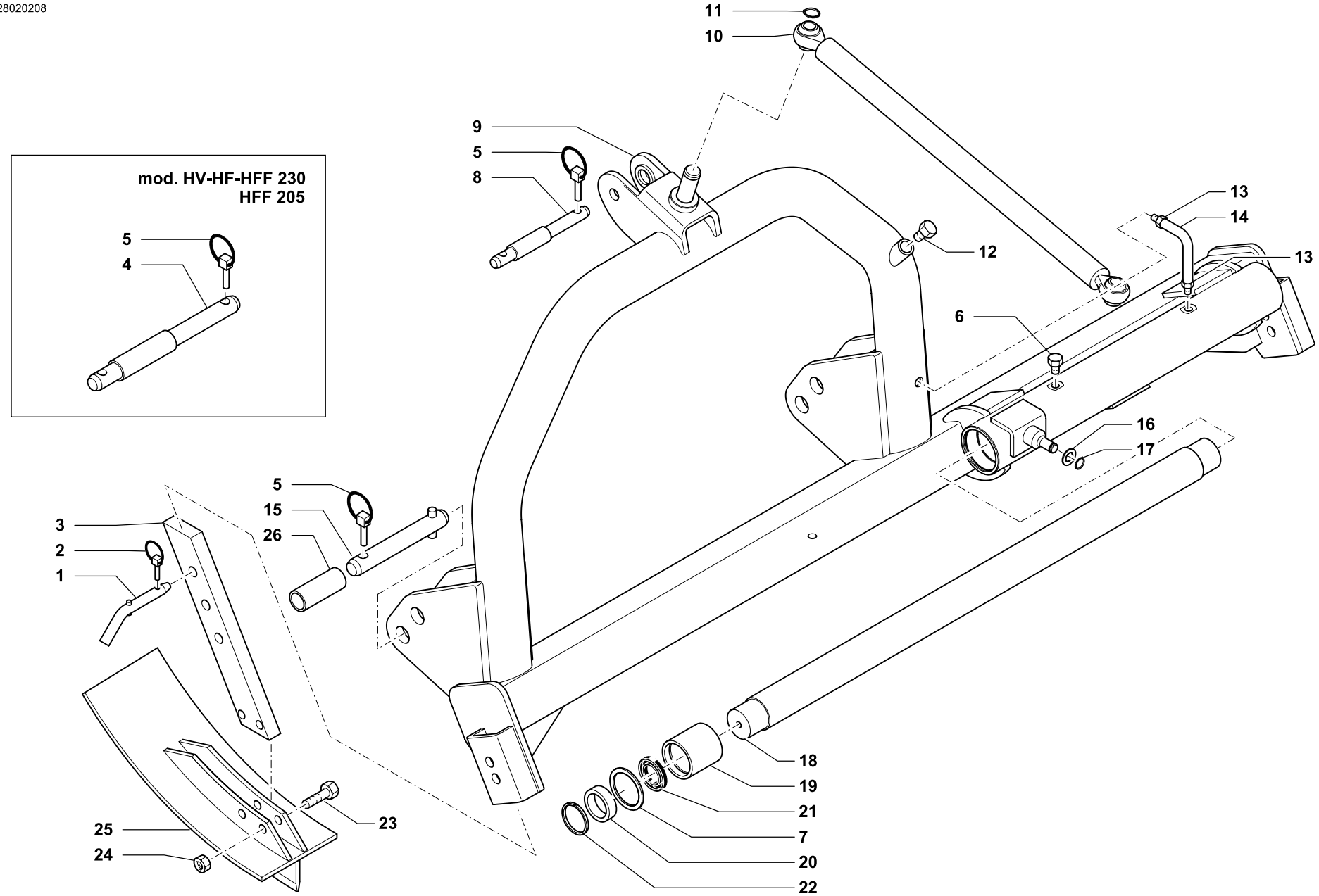


CELLI

**CASTELLO • CASTEL**
**SCHLOSS • CHATEAU**

| Tav. Tab. Taf. | Rev. | |
|---|---|---|
| 136328 | 02 | 0208 |

| RIF. | N. CODICE | DENOMINAZIONE | DENOMINATION | BEZEICHNUNG | DENOMINATION |
|---|---|---|---|---|---|
| 1 | 223522 | Perno regolazione pattino | Pivot | Bolzen | Axe |
| 2 | 013023 | Spina a scatto | Pin | Stift | Goupille |
| 3 | 323605 | Asta regolazione pattino | Rod | Stange | Tige |
| 4 | 623757 | Perno (solo per HV HF HFF 230 E HFF 205) | Pivot (only for HV HF HFF 230 E HFF 205) | Bolzen | Axe |
| 5 | 013011 | Spina a scatto | Pin | Stift | Goupille |
| | 013039 | Spina | Pin | Stift | Goupille |
| 6 | 022009 | Tappo 1/4 gas | Plug | Verschluss | Bouchon |
| 7 | 312752 | Distanziale | Spacer | Distanzstueck | Entretoise |
| 8 | 123534 | Perno 3 punti | Pivot | Bolzen | Axe |
| HV HF135 9 | 362581 | Castello | Castel | Schloss | Chateau |
| HFF 135 | 362582 | Castello | Castel | Schloss | Chateau |
| HV140-160 | 362583 | Castello | Castel | Schloss | Chateau |
| HF 160 | 362584 | Castello | Castel | Schloss | Chateau |
| HFF160 HF185 | 362585 | Castello | Castel | Schloss | Chateau |
| HV 185 | 362586 | Castello | Castel | Schloss | Chateau |
| HFF185 HF205 | 362587 | Castello | Castel | Schloss | Chateau |
| HV 205 | 362588 | Castello | Castel | Schloss | Chateau |
| HFF230 HF255 | 362589 | Castello | Castel | Schloss | Chateau |
| HFF205 HF230 | 362580 | Castello | Castel | Schloss | Chateau |
| HV 230 | 362590 | Castello | Castel | Schloss | Chateau |
| 10 | 361743 | Tirante oscillazione | Linkage | Zugbolzen | Tirant |
| 11 | 011016 | Anello di arresto | Stop ring | Sperring | Bague d’arret |
| 12 | 022010 | Tappo 1/2 con sfiato | Plug | Verschluss | Bouchon |
| 13 | 022073 | Raccordo 1/4”x8x90 | Connection | Anschluss | Raccord |
| 14 | 023029 | Tubo rilsan | Hose | Schlauch | Tuyau |
| 15 | 423720 | Perno | Pivot | Bolzen | Axe |
| 16 | 010002 | Rondella | Washer | Unterlegscheibe | Rondelle |
| 17 | 001036 | Anello di arresto | Stop ring | Sperring | Bague d’arret |
| 18 | 323602 | Asta cromata L=1020 | Chromium plated rod L=1020 | Verchromte Stange L=1020 | Tige chromee L=1020 |
| | 323603 | Asta cromata L=1120 | Chromium plated rod L=1120 | Verchromte Stange L=1120 | Tige chromee L=1120 |
| 19 | 323604 | Bronzina | Bushing | Buchse | Douille |
| 20 | 007147 | Balsele | Gasket | Dichtring | Joint |
| 21 | 007148 | Guarnizione | Gasket | Dichtring | Joint |
| 22 | 001050 | Anello di arresto | Stop ring | Sperring | Bague d’arret |

| RIF. | N. CODICE | DENOMINAZIONE | DENOMINATION | BEZEICHNUNG | DENOMINATION |
|---|---|---|---|---|---|
| 23 | 014126 | Vite | Screw | Schraube | Vis |
| 24 | 004054 | Dado autobloccante | Nut | Mutter | Ecrou |
| 25 | 361732 | Pattino | Skid | Kufe | Patin |
| 26 | 332526 | Boccola | Bushing | Buchse | Douille |

136420000100

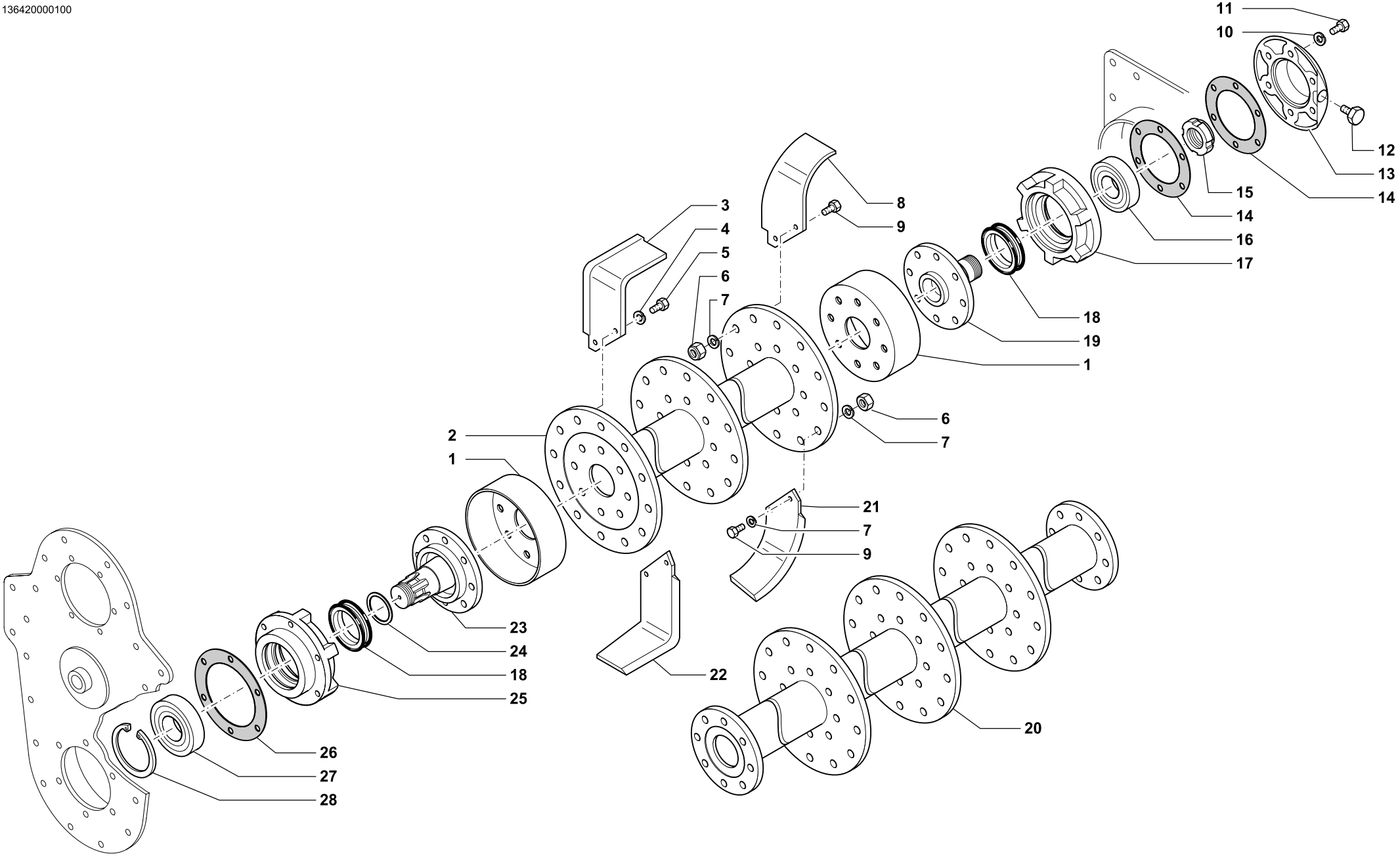


**ROTORE A ZAPPE • BLADE TYPE ROTOR**
**MESSERWELLE • ROTOUR A LAMES**

| Tav. Tab. Taf. | 136420 | Rev. 00 | 0100 |
|---|---|---|---|

| | RIF. | N. CODICE | DENOMINAZIONE | DENOMINATION | BEZEICHNUNG | DENOMINATION |
|---|---|---|---|---|---|---|
| | 1 | 311519 | Gruppo parapolvere | Dust cover | Staubdeckel | Cache anti poussière |
| 135 | 2 | 361661 | Rotore D | Rotor | Messerwelle | Rotour |
| 160 | | 361662 | Rotore D | Rotor | Messerwelle | Rotour |
| 185 | | 361663 | Rotore D | Rotor | Messerwelle | Rotour |
| 205 | | 361600 | Rotore D | Rotor | Messerwelle | Rotour |
| 230 | | 361815 | Rotore D | Rotor | Messerwelle | Rotour |
| | 3 | 422512 | Zappa a squadra DX | Blade | Messer | Lame |
| | 4 | 011004 | Grower | Grower | Federscheibe | Grower |
| | 5 | 014004 | Vite | Screw | Schraube | Vis |
| | 6 | 004004 | Dado | Nut | Mutter | Ecrou |
| | 7 | 011036 | Rosetta | Washer | Unterlegscheibe | Rondelle |
| | 8 | 422514 | Zappa destra elicoidale | Right helicoidal blade | Gekrümmtes Messer R.H. | Lame helicöidale droite |
| | 9 | 014004 | Vite | Screw | Schraube | Vis |
| | 10 | 011012 | Rosetta ondulata | Washer | Unterlegscheibe | Rondelle |
| | 11 | 014256 | Vite | Screw | Schraube | Vis |
| | 12 | 022060 | Tappo conico | Plug | Verschluss | Bouchon |
| | 13 | 321524 | Coperchio DX | Cover | Deckel | Couvercle |
| | 14 | 324513 | Guarnizione supporto DX | Gasket | Dichtring | Joint |
| | 15 | 005008 | Ghiera autobloccante | Ring nut | Nutmutter | Collier |
| | 16 | 003011 | Cuscinetto | Bearing | Kugellager | Roulement |
| | 17 | 321523 | Supporto DX | Support | Halterung | Support |
| | 18 | 099016 | Gruppo tenuta | Oil seal | Simmerring | Joint d' huile |
| | 19 | 322528 | Fusello DX | Stub axle | Flansch | Fusee |
| 135 | 20 | 361666 | Rotore F | Rotor | Messerwelle | Rotour |
| 160 | | 361667 | Rotore F | Rotor | Messerwelle | Rotour |
| 185 | | 361668 | Rotore F | Rotor | Messerwelle | Rotour |
| 205 | | 361707 | Rotore F | Rotor | Messerwelle | Rotour |
| 230 | | 361816 | Rotore F | Rotor | Messerwelle | Rotour |
| | 21 | 422515 | Zappa sinistra elicoidale | Left helicoidal blade | Gekrümmtes Messer L.H. | Lame helicöidale gauche |
| | 22 | 422513 | Zappa a squadra SX | Blade | Messer | Lame |
| | 23 | 322527 | Fusello SX | Stub axle | Flansch | Fusee |
| | 24 | 323672 | Distanziale | Spacer | Distanzstueck | Entretoise |
| | 25 | 321535 | Supporto SX | Support | Halterung | Support |
| | 26 | 324512 | Guarnizione supporto SX | Gasket | Dichtring | Joint |
| | 27 | 003161 | Cuscinetto | Bearing | Kugellager | Roulement |
| | 28 | 001003 | Anello di arresto | Stop ring | Sperring | Bague d'arret |

136421000100

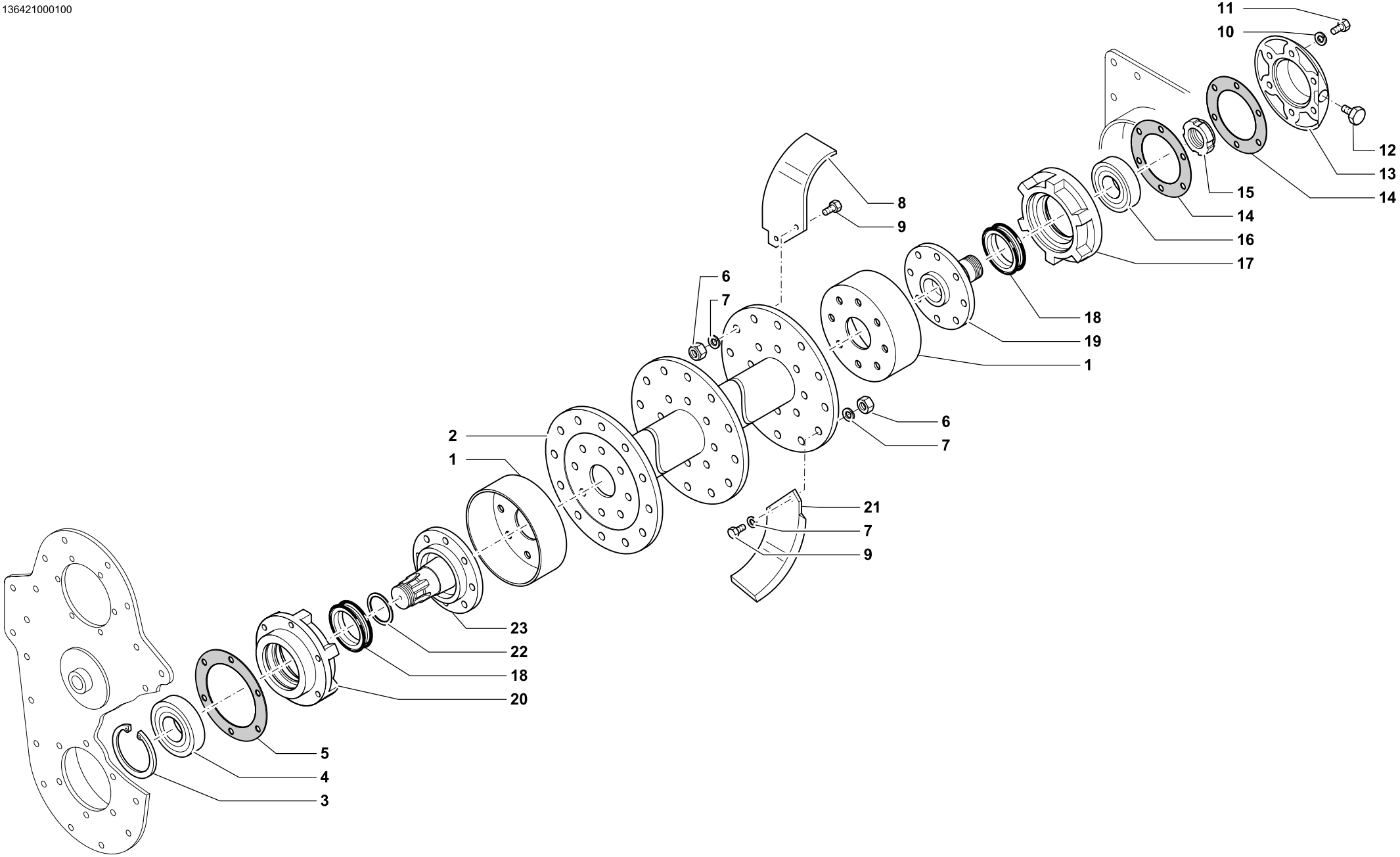


**ROTORE SPECIALE • SPECIAL ROTOR**
**SONDERROTOR • ROTOR SPECIAL**

| Tav. Tab. Taf. | Rev. | |
|---|---|---|
| **136421** | **00** | **0100** |

| | RIF. | N. CODICE | DENOMINAZIONE | DENOMINATION | BEZEICHNUNG | DENOMINATION |
|---|---|---|---|---|---|---|
| | 1 | 311519 | Gruppo parapolvere | Dust cover | Staubdeckel | Cache anti poussière |
| 135 | 2 | 361890 | Rotore | Rotor | Rotor | Rotor |
| 160 | | 361891 | Rotore | Rotor | Rotor | Rotor |
| 185 | | 361892 | Rotore | Rotor | Rotor | Rotor |
| 205 | | 361893 | Rotore | Rotor | Rotor | Rotor |
| 230 | | 361894 | Rotore | Rotor | Rotor | Rotor |
| | 3 | 001003 | Anello di arresto | Stop ring | Sperring | Bague d’arret |
| | 4 | 003161 | Cuscinetto | Bearing | Kugellager | Roulement |
| | 5 | 324512 | Guarnizione supporto SX | Gasket | Dichtring | Joint |
| | 6 | 004030 | Dado | Nut | Mutter | Ecrou |
| | 7 | 011003 | Grower | Grower | Federscheibe | Grower |
| | 8 | 522606 | Zappa destra elicoidale | Right helicoidal blade | Gekrümmtes Messer R.H. | Lame helicöidale droit |
| | 9 | 014146 | Vite | Screw | Schraube | Vis |
| | 10 | 011012 | Rosetta ondulata | Washer | Unterlegscheibe | Rondelle |
| | 11 | 014256 | Vite | Screw | Schraube | Vis |
| | 12 | 022060 | Tappo conico | Plug | Verschluss | Bouchon |
| | 13 | 321524 | Coperchio DX | Cover | Deckel | Couvercle |
| | 14 | 324513 | Guarnizione supporto DX | Gasket | Dichtring | Joint |
| | 15 | 005008 | Ghiera autobloccante | Ring nut | Nutmutter | Collier |
| | 16 | 003011 | Cuscinetto | Bearing | Kugellager | Roulement |
| | 17 | 321523 | Supporto DX | Support | Halterung | Support |
| | 18 | 099016 | Gruppo tenuta | Oil seal | Simmerring | Joint d’ huile |
| | 19 | 322528 | Fusello DX | Stub axle | Flansch | Fusee |
| | 20 | 321535 | Supporto SX | Support | Halterung | Support |
| | 21 | 522607 | Zappa sinistra elicoidale | Left helicoidal blade | Gekrümmtes Messer L.H. | Lame helicöidale gauche |
| | 22 | 323672 | Distanziale | Spacer | Distanzstueck | Entretoise |
| | 23 | 322527 | Fusello SX | Stub axle | Flansch | Fusee |

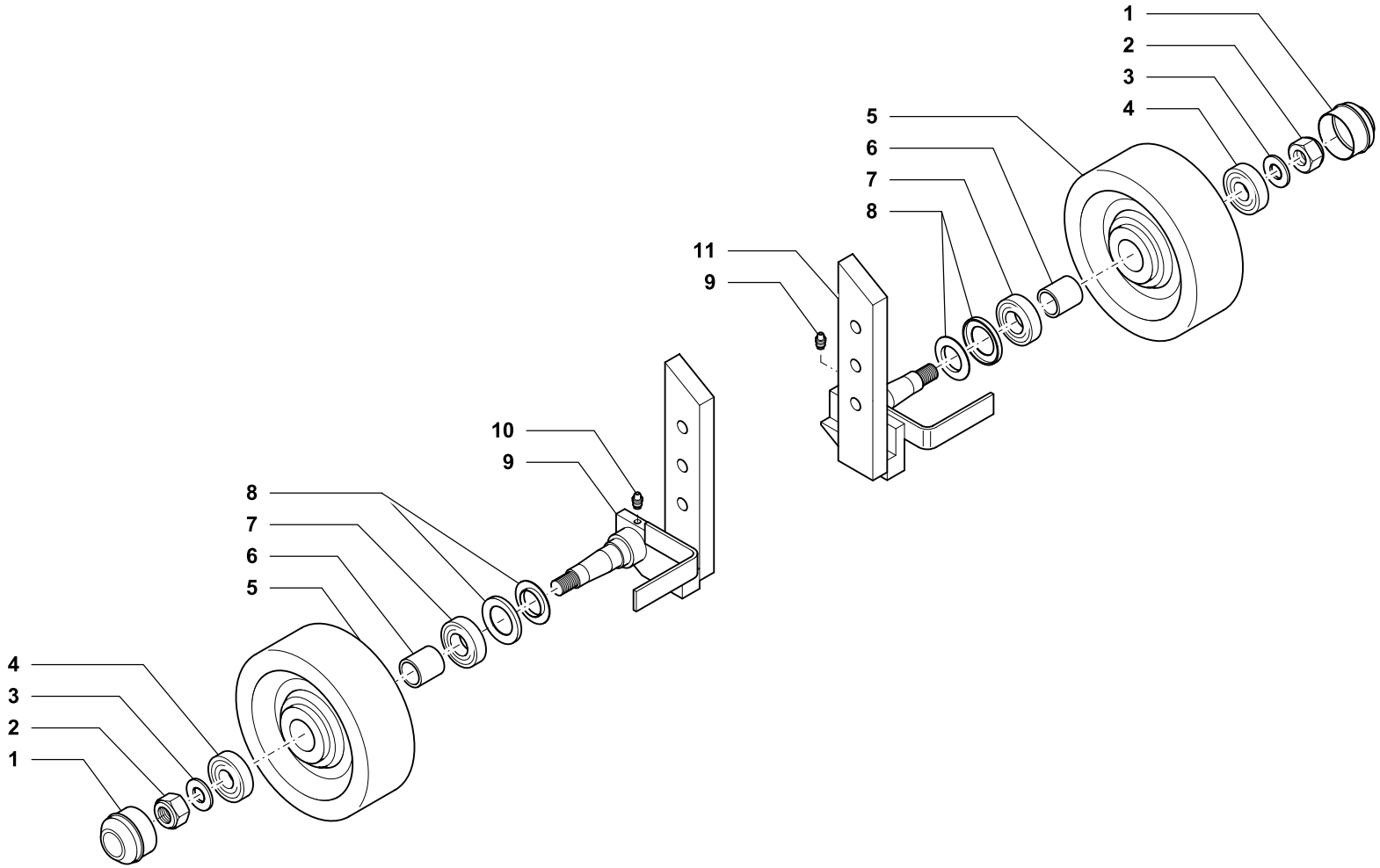


**RUOTE • WHEELS**
**STUTZRAD • ROUES**

| Tav. Tab. Taf. | 136126 | Rev. 00 | 0100 |
|---|---|---|---|

| RIF. | N. CODICE | DENOMINAZIONE | DENOMINATION | BEZEICHNUNG | DENOMINATION |
|---|---|---|---|---|---|
| 1 | 015008 | Cappellotto | Cap | Kappe | Capuchon |
| 2 | 004074 | Dado autobloccante | Dado | Nut | MutterEcrou |
| 3 | 010008 | Rondella piana | Washer | Unterlegscheibe | Rondelle |
| 4 | 003059 | Cuscinetto | Bearing | Kugellager | Roulement |
| 5 | 015010 | Ruota in ferro | Wheels | Stutzrad | Roues |
| 6 | 323596 | Boccola distanziale | Bush | Buchse | Bague |
| 7 | 003090 | Cuscinetto | Bearing | Kugellager | Roulement |
| 8 | 099017 | Gruppo parapolvere | Dust cover | Staubdeckel | Cache anti poussière |
| 9 | 361784 | Asta ruota sinistra | Rod | Stange | Tige |
| 10 | 008001 | Ingrassatore | Grease nipple | Fettbuechse | Graisseur |
| 11 | 361783 | Asta ruota destra | Rod | Stange | Tige |

136513010208

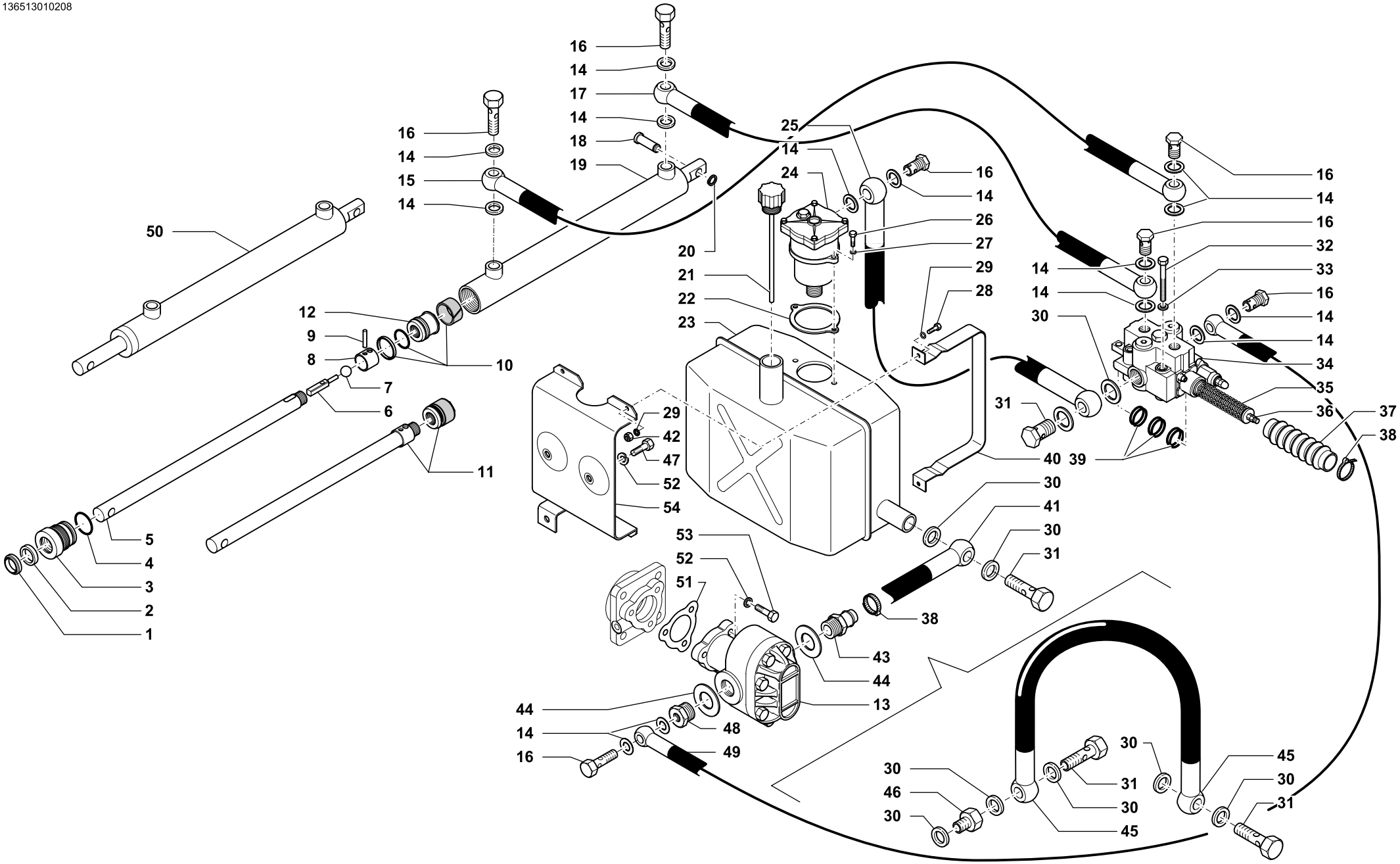


CELLI

**IMPIANTO IDRAULICO SERBATOIO • TANK HYDRAULIC SYSTEM**
**HYDRAULISCHE TANKANLAGE • SYSTEME HYDRAULIQUE RESERVOIR**

| Tav. Tab. Taf. | 136513 | Rev. 01 | 0208 |
|---|---|---|---|

| RIF. | N. CODICE | DENOMINAZIONE | DENOMINATION | BEZEICHNUNG | DENOMINATION |
|---|---|---|---|---|---|
| 1 | 007146 | Parapolvere | Dust cover | Staubdeckel | Cache anti poussière |
| 2 | 007145 | Guarnizione | Gasket | Dichtring | Joint |
| 3 | 323611 | Guida stelo | Guide | Halterung | Guide |
| 4 | 007120 | Guarnizione OR | Gasket OR | Dichtring OR | Joint OR |
| 5 | 323609 | Stelo martinetto | Rod | Spindel | Tige |
| 6 | 323613 | Spina di battuta | Pin | Stift | Goupille |
| 7 | 003130 | Sfera | Ball | Kugel | Sphère |
| 8 | 323614 | Bussola di battuta | Bushing | Buchse | Douille |
| 9 | 323615 | Perno per bussola di battuta | Pivot | Bolzen | Axe |
| 10 | 007155 | Serie di guarnizione | Gaskets set | Satz Dichtungen | Série de joints |
| 11 | 371547 | Stelo + pistone (corsa 350) | Piston rod and piston (stroke: 350) | Kolben und Stange (Hub: 350) | Tige verin course de 350 |
| | 371548 | Stelo + pistone (corsa 400) | Piston rod and piston (stroke: 400) | Kolben und Stange (Hub: 400) | Tige verin course de 400 |
| 12 | 323612 | Pistone | Piston | Kolben | Piston |
| 13 | 021035 | Pompa | Pump | Pumpe | Pompe |
| 14 | 022008 | Rondella | Washer | Unterlegscheibe | Rondelle |
| 15 | 023038 | Tubo | Hose | Schlauch | Tuyau |
| 16 | 022030 | Vite forata | Screw | Schraube | Vis |
| 17 | 023039 | Tubo | Hose | Schlauch | Tuyau |
| 18 | 323616 | Perno attacco martinetto | Pivot | Bolzen | Axe |
| 19 | 361740 | Corpo martinetto (corsa 350) | Ram jacket (stroke: 350) | Windenmantel (Hub: 350) | Chemise corps vèrin 350 |
| | 361741 | Corpo martinetto (corsa 400) | Ram jacket (stroke: 400) | Windenmantel (Hub: 400) | Chemise corps vèrin 400 |
| 20 | 001036 | Anello di arresto | Stop ring | Sperring | Bague d’arret |
| 21 | 022039 | Tappo | Plug | Pfropfen | Bouchon |
| 22 | 324514 | Guarnizione | Gasket | Dichtring | Joint |
| 23 | 361748 | Serbatoio | Oil tank | Öltank | Réservoir |
| 24 | 021031 | Filtro | Oil filter | Ölfilter | Filtre |
| | 020030 | Cartuccia | Cartridge | Patrone | Cartouche |
| 25 | 023040 | Tubo L=600 | Hose | Schlauch | Tuyau |
| | 023041 | Tubo L=750 | Hose | Schlauch | Tuyau |
| | 023042 | Tubo L=850 | Hose | Schlauch | Tuyau |
| | 023043 | Tubo L=1100 | Hose | Schlauch | Tuyau |
| | 023044 | Tubo L=1225 | Hose | Schlauch | Tuyau |
| | 023073 | Tubo L=1470 | Hose | Schlauch | Tuyau |

| RIF. | N. CODICE | DENOMINAZIONE | DENOMINATION | BEZEICHNUNG | DENOMINATION |
|---|---|---|---|---|---|
| 26 | 014032 | Vite | Screw | Schraube | Vis |
| 27 | 010015 | Rondella | Washer | Unterlegscheibe | Rondelle |
| 28 | 014062 | Vite | Screw | Schraube | Vis |
| 29 | 011009 | Grower | Grower | Federscheibe | Grower |
| 30 | 022023 | Rondella | Washer | Unterlegscheibe | Rondelle |
| 31 | 022074 | Vite forata | Screw | Schraube | Vis |
| 32 | 014252 | Vite | Screw | Schraube | Vis |
| 33 | 011001 | Grower | Grower | Federscheibe | Grower |
| 34 | 021034 | Deviatore completo | Oil control mechanism | Ölverteiler | Diviseur |
| | 021024 | Valvola | Valve | Ventil | Soupape |
| | 021041 | Stelo | Rod | Spindel | Tige |
| | 021042 | Coperchio posteriore | Cover | Deckel | Couvercle |
| 35 | 021039 | Molla | Spring | Feder | Ressort |
| 36 | 021040 | Tirante | Linkage | Zugbolzen | Tirant |
| 37 | 021038 | Soffietto | Protection bellows | Schutzfaltenbalg | Soufflet |
| 38 | 023005 | Fascetta | Collar | Schelle | Collier |
| 39 | 022061 | Serie di guarnizione | Gaskets set | Satz Dichtungen | Série de joints |
| 40 | 312614 | Fascetta attacco serbatoio | Tank fastening collar | Tankbefestigungsschelle | Collier de fixation réservoir |
| 41 | 023032 | Tubo | Hose | Schlauch | Tuyau |
| 42 | 004023 | Dado | Nut | Mutter | Ecrou |
| 43 | 022076 | Raccordo | Connection | Anschluss | Raccord |
| 44 | 022025 | Rondella | Washer | Unterlegscheibe | Rondelle |
| 45 | 023069 | Tubo | Hose | Schlauch | Tuyau |
| 46 | 022084 | Riduzione | Nipple | Nippel | Reduction |
| 47 | 014007 | Vite | Screw | Schraube | Vis |
| 48 | 022075 | Raccordo | Connection | Anschluss | Raccord |
| 49 | 023033 | Tubo L=1100 | Hose | Schlauch | Tuyau |
| | 023034 | Tubo L=1240 | Hose | Schlauch | Tuyau |
| | 023035 | Tubo L=1350 | Hose | Schlauch | Tuyau |
| | 023036 | Tubo L=1600 | Hose | Schlauch | Tuyau |
| | 023037 | Tubo L=1725 | Hose | Schlauch | Tuyau |
| | 023077 | Tubo L=2000 | Hose | Schlauch | Tuyau |
| | 023068 | Tubo L=1900 | Hose | Schlauch | Tuyau |
| | 023079 | Tubo L=2220 | Hose | Schlauch | Tuyau |

| RIF. | N. CODICE | DENOMINAZIONE | DENOMINATION | BEZEICHNUNG | DENOMINATION |
|---|---|---|---|---|---|
| 50 | 371543 | Martinetto (corsa 350) | Complete jack | Komplette winde | Vérin complet |
| 50 | 371544 | Martinetto (corsa 400) | Complete jack | Komplette winde | Vérin complet |
| | 007155 | Serie di guarnizione | Gaskets set | Satz Dichtungen | Série de joints |
| 51 | 324515 | Guarnizione | Gasket | Dichtring | Joint |
| 52 | 011002 | Grower | Grower | Federscheibe | Grower |
| 53 | 014260 | Vite | Screw | Schraube | Vis |
| 54 | 361749 | Supporto serbatoio | Support | Halterung | Support |

136514010208

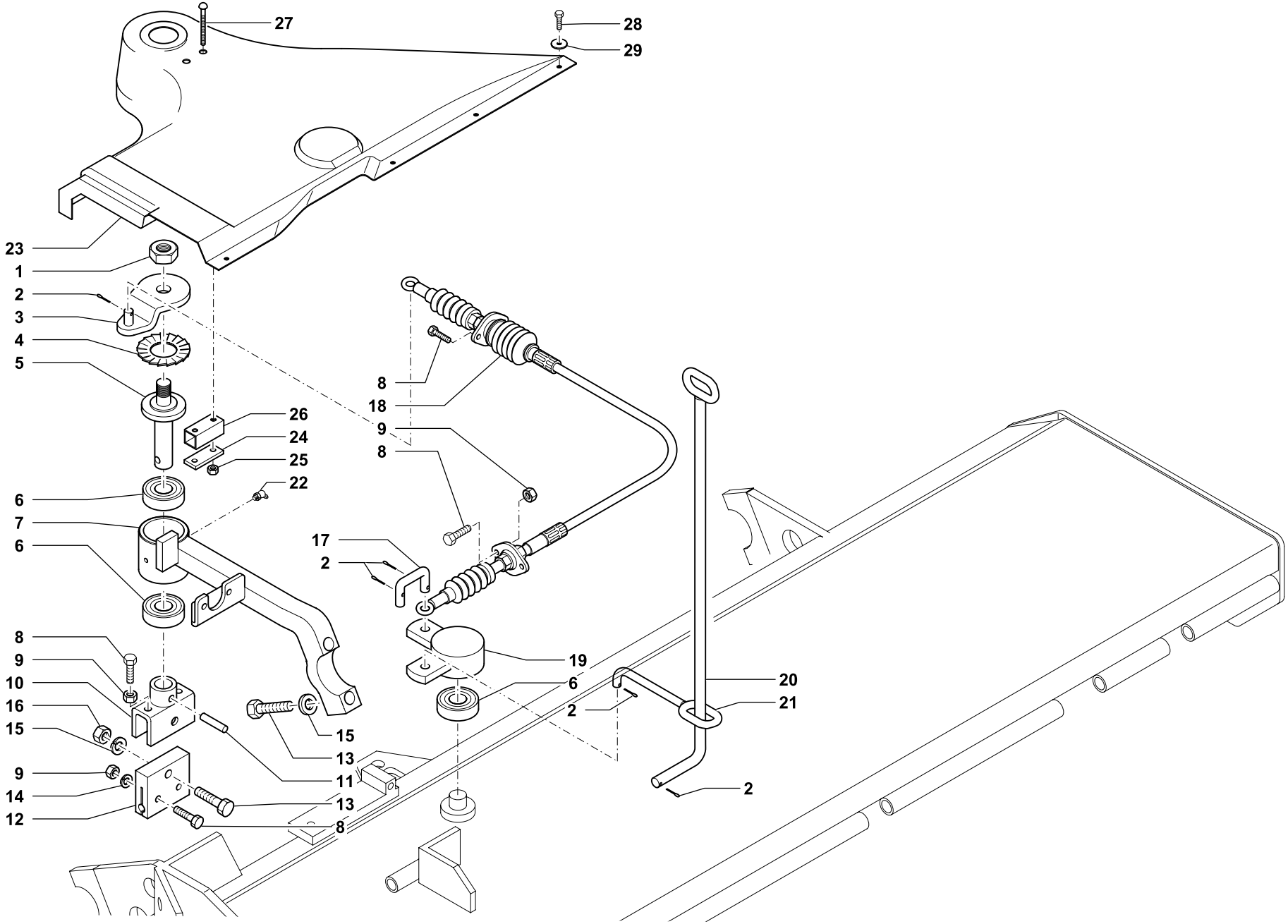


**IMPIANTO DI SPOSTAMENTO HF205 HF230 HFF185 HFF205 • SHIFT SYSTEM**
**VERSCHIEBUNGSANLAGE • SYSTEME DE DEPORT**

| Tav. Tab. Taf. | Rev. | |
|---|---|---|
| 136514 | 01 | 0208 |

| RIF. | N. CODICE | DENOMINAZIONE | DENOMINATION | BEZEICHNUNG | DENOMINATION |
|---|---|---|---|---|---|
| 1 | 004085 | Dado | Nut | Mutter | Ecrou |
| 2 | 002008 | Copiglia | Split pin | Hohlstift | Goupille |
| 3 | 362527 | Leva comando deviatore | Hand operated lever | Handhebel | Levier de commande |
| 4 | 011025 | Rondella dentata | Washer | Unterlegscheibe | Rondelle |
| 5 | 362528 | Perno porta tastatore | Pivot | Bolzen | Axe |
| 6 | 003053 | Cuscinetto | Bearing | Kugellager | Roulement |
| 7 | 371816 | Supporto tastatore | Support | Halterung | Support |
| 8 | 014245 | Vite | Screw | Schraube | Vis |
| 9 | 004001 | Dado | Nut | Mutter | Ecrou |
| 10 | 362529 | Forcella braccio tastatore | Fork | Gabelstueck | Fourche |
| 11 | 013026 | Spina spirol | Pin | Stift | Goupille |
| 12 | 323617 | Piastra attacco tastatore | Plate | Plate | Platte |
| 13 | 014220 | Vite | Screw | Schraube | Vis |
| 14 | 011001 | Grower | Grower | Federscheibe | Grower |
| 15 | 011002 | Grower | Grower | Federscheibe | Grower |
| 16 | 004059 | Dado | Nut | Mutter | Ecrou |
| 17 | 923552 | Tirante comando idrostato | Linkage | Zugbolzen | Tirant |
| 18 | 025012 | Cavo L=870 HFF180 - HF205 | Cable | Kabel | Cable |
| | 025013 | Cavo L=970 HFF205 - HF230 | Cable | Kabel | Cable |
| | 025014 | Cavo L=1220 HFF230 - HF255 | Cable | Kabel | Cable |
| | 025015 | Cavo L=1500 HFF255 | Cable | Kabel | Cable |
| 19 | 361825 | Supporto tirante deviatore | Support | Halterung | Support |
| 20 | 362521 | Leva comando cavo flessibile | Hand operated lever | Handhebel | Levier de commande |
| 21 | 362522 | Braccio collegamento leva | Arm | Arm | Bras |
| 22 | 008002 | Ingrassatore | Grease nipple | Fettbuechse | Graisseur |
| 23 | 324519 | Prot. salvafrutti HFF 255 K | Fruit guard | Fruchtschutzkappe | Protection arbre fruitier |
| | 324520 | Prot. salvafrutti HF205-230-255K | Fruit guard | Fruchtschutzkappe | Protection arbre fruitier |
| | 324520 | Prot. salvafrutti HFF185-205-230K | Fruit guard | Fruchtschutzkappe | Protection arbre fruitier |
| 24 | 323668 | Controstaffa | Counterbracket | Unteres Spanneisen | Contre bride |
| 25 | 004083 | Dado | Nut | Mutter | Ecrou |
| 26 | 323667 | Staffa di attacco | Bracket | Oberes Spanneisen | Bride d’attache |
| 27 | 014313 | Vite | Screw | Schraube | Vis |
| 28 | 014032 | Vite | Screw | Schraube | Vis |
| 29 | 010024 | Rondella | Washer | Unterlegscheibe | Rondelle |

136524000500

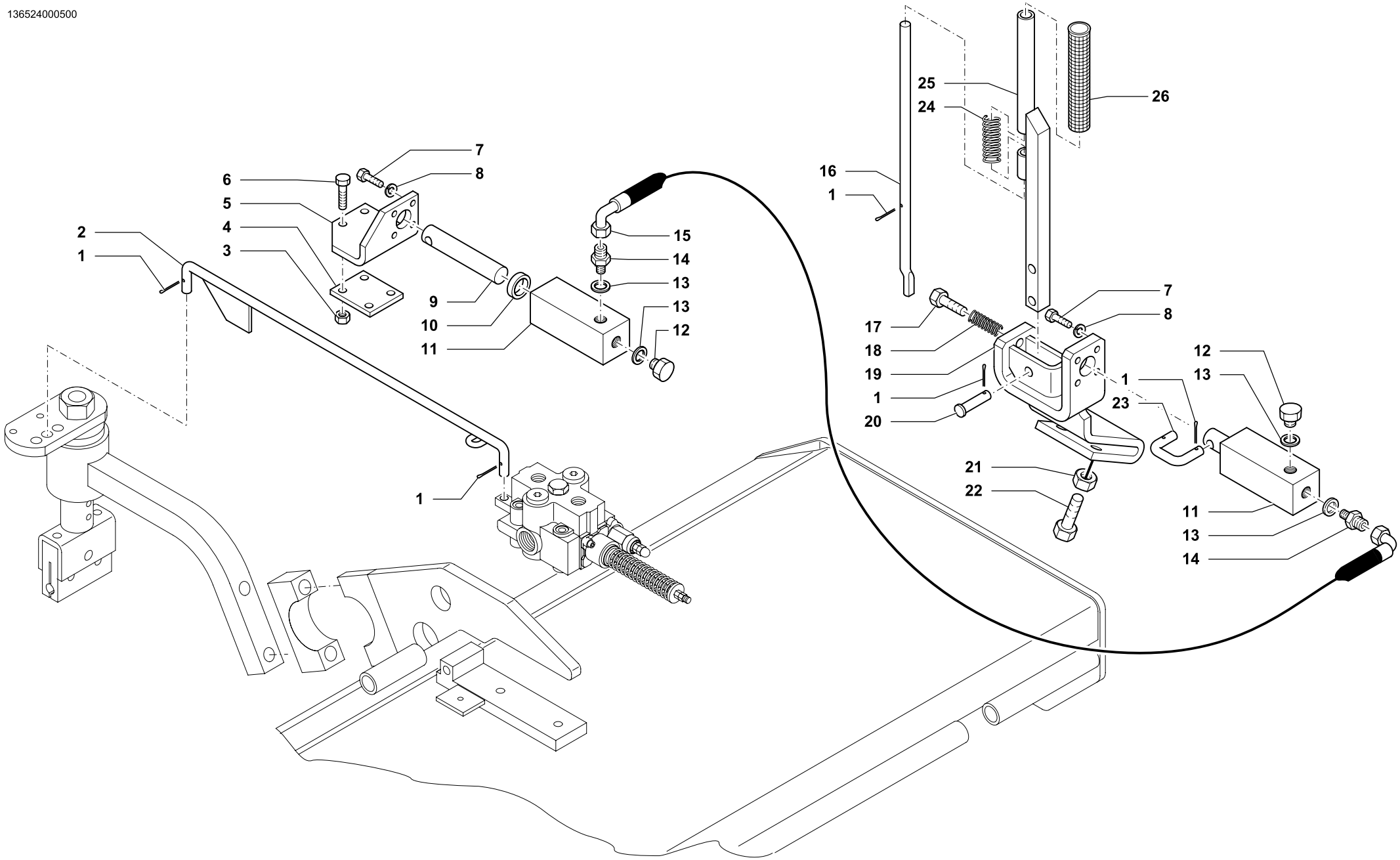


**COMANDO MANUALE IDROSTATICO • HYDROSTATIC MANUAL CONTROL**
**HYDROSTATISCHE MANUELLE BETÄTINGUNG • COMMANDE MANUELLE HYDROSTATIQUE**

| Tav. Tab. Taf. | Rev. | |
|---|---|---|
| 136524 | 00 | 0500 |

| RIF. | N. CODICE | DENOMINAZIONE | DENOMINATION | BEZEICHNUNG | DENOMINATION |
|---|---|---|---|---|---|
| 1 | 002012 | Copiglia | Split pin | Splint | Goupille |
| 2 | 961632 | Tirante comando idrostatico | Linkage | Zugbolzen | Tirant |
| 3 | 004055 | Dado | Nut | Mutter | Ecrou |
| 4 | 923554 | Piastra supporto martinetto | Plate | Plate | Platte |
| 5 | 923555 | Supporto per martinetto | Support | Halterung | Support |
| 6 | 014123 | Vite | Screw | Schraube | Vis |
| 7 | 014061 | Vite | Screw | Schraube | Vis |
| 8 | 011009 | Grower | Grower | Federscheibe | Grower |
| 9 | 923553 | Pistone | Piston | Kolben | Pston |
| 10 | 007183 | Guarnizione | Gasket | Dichtring | Joint |
| 11 | 923556 | Cilindro | Cylinder | Zylinder | Cilindre |
| 12 | 022009 | Tappo | Plug | Verschluss | Bouchon |
| 13 | 022085 | Rondella | Washer | Scheibe | Rondelle |
| 14 | 022104 | Riduzione | Nipple | Nippel | Reduction |
| 15 | 023081 | Tubo | Hose | Schlauch | Tuyau |
| 16 | 923551 | Perno di bloccaggio | Pivot | Bolzen | Axe |
| 17 | 014256 | Vite | Screw | Schraube | Vis |
| 18 | 012027 | Molla | Spring | Feder | Ressort |
| 19 | 961631 | Supporto pompa | Support | Halterung | Support |
| 20 | 923550 | Perno | Pivot | Bolzen | Axe |
| 21 | 004058 | Dado | Nut | Mutter | Ecrou |
| 22 | 014150 | Vite | Screw | Schraube | Vis |
| 23 | 923552 | Tirante | Linkage | Zugbolzen | Tirant |
| 24 | 012026 | Molla | Spring | Feder | Ressort |
| 25 | 961630 | Leva | Lever | Hebel | Levier |
| 26 | 099045 | Manopola | Knob | Poignée | Griff |
| | 971549 | Kit comando manuale idrostatico | Hydrostatic manual control kit | Satz hydrost. manuelle Betätigung | Kit commande manuelle hydrost. |

136522010208

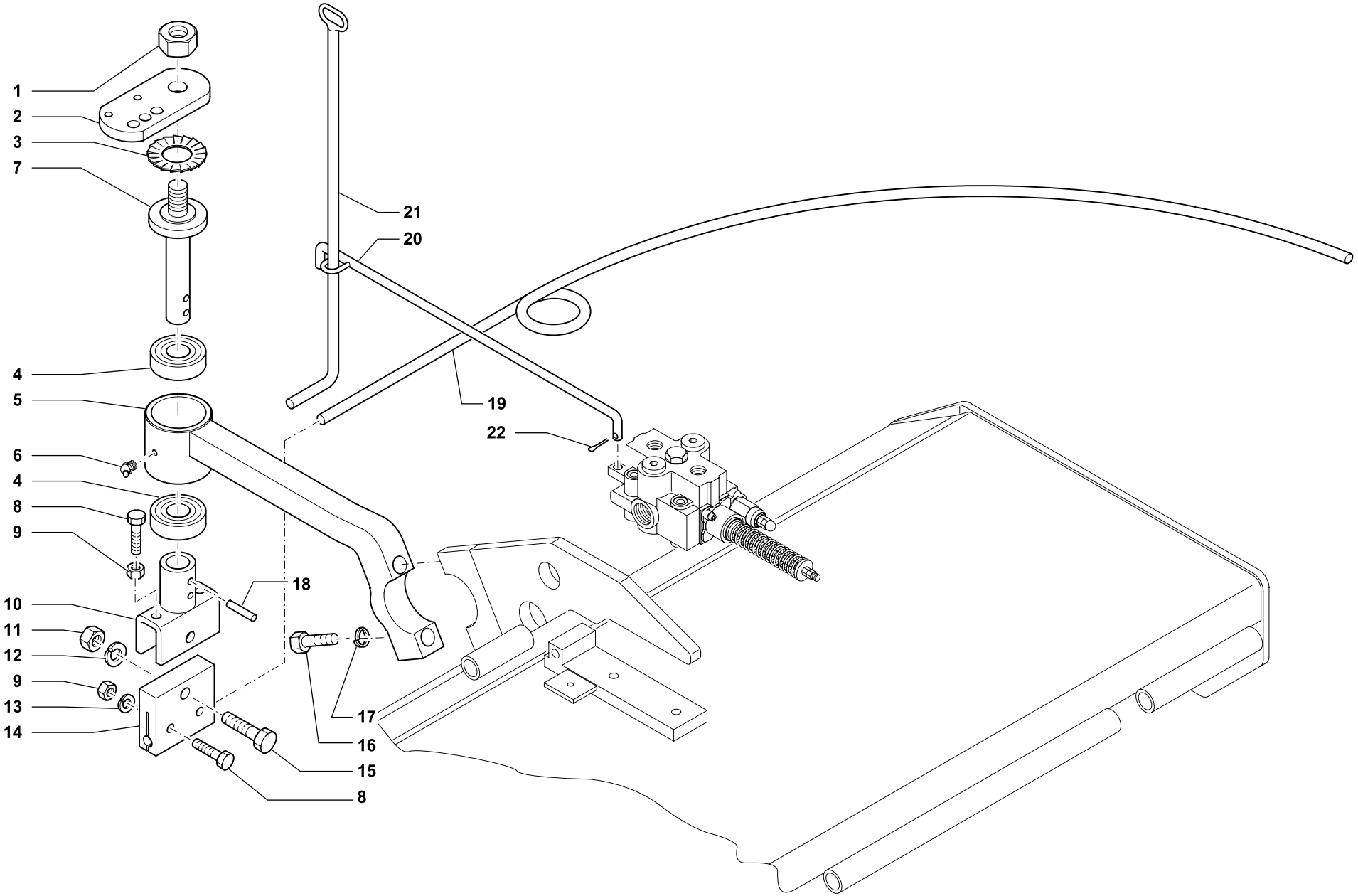


**IMPIANTO DI SPOSTAMENTO HV HF ≤185 HFF ≤ 160• SIDE-SHIFT**
**SEITENVERSCHIEBUNG • DEPORT LATERAL**

| Tav. Tab. Taf. | Rev. | |
|---|---|---|
| **136522** | **01** | **0208** |

| RIF. | N. CODICE | DENOMINAZIONE | DENOMINATION | BEZEICHNUNG | DENOMINATION |
|---|---|---|---|---|---|
| 1 | 004085 | Dado | Nut | Mutter | Ecrou |
| 2 | 323607 | Leva comando deviatore | Hand operated lever | Handhebel | Levier de commande |
| 3 | 011025 | Rondella dentata | Washer | Unterlegscheibe | Rondelle |
| 4 | 003053 | Cuscinetto | Bearing | Kugellager | Roulement |
| 5 | 371815 | Supporto tastatore | Support | Halterung | Support |
| 6 | 008002 | Ingrassatore | Grease nipple | Fettbuechse | Graisseur |
| 7 | 361735 | Perno porta tastatore | Pivot | Bolzen | Axe |
| 8 | 014245 | Vite | Screw | Schraube | Vis |
| 9 | 004001 | Dado | Nut | Mutter | Ecrou |
| 10 | 361734 | Forcella braccio tastatore | Fork | Gabelstueck | Fourche |
| 11 | 004059 | Dado | Nut | Mutter | Ecrou |
| 12 | 011002 | Grower | Grower | Federscheibe | Grower |
| 13 | 011001 | Grower | Grower | Federscheibe | Grower |
| 14 | 323617 | Piastra attacco tastatore | Plate | Plate | Platte |
| 15 | 014220 | Vite | Screw | Schraube | Vis |
| 16 | 014083 | Vite | Screw | Schraube | Vis |
| 17 | 011004 | Grower | Grower | Federscheibe | Grower |
| 18 | 013015 | Spina spirol | Pin | Stift | Goupille |
| 19 | 323587 | Braccio tastatore | Feeler bar | Tastarm | Tateur |
| 20 | 361736 | Tirante con deviatore | Control bar | Kontrollstange | Guide de commande |
| 21 | 361724 | Leva comando diritta | Hand operated lever | Handhebel | Levier de commande |
| | 361725 | Leva comando a rinvio | Hand operated lever | Handhebel | Levier de commande |
| | 361726 | Leva comando a rinvio | Hand operated lever | Handhebel | Levier de commande |
| | 361931 | Leva comando a rinvio | Hand operated lever | Handhebel | Levier de commande |
| 22 | 002012 | Copiglia | Split pin | Hohlstift | Goupille |

136146000300

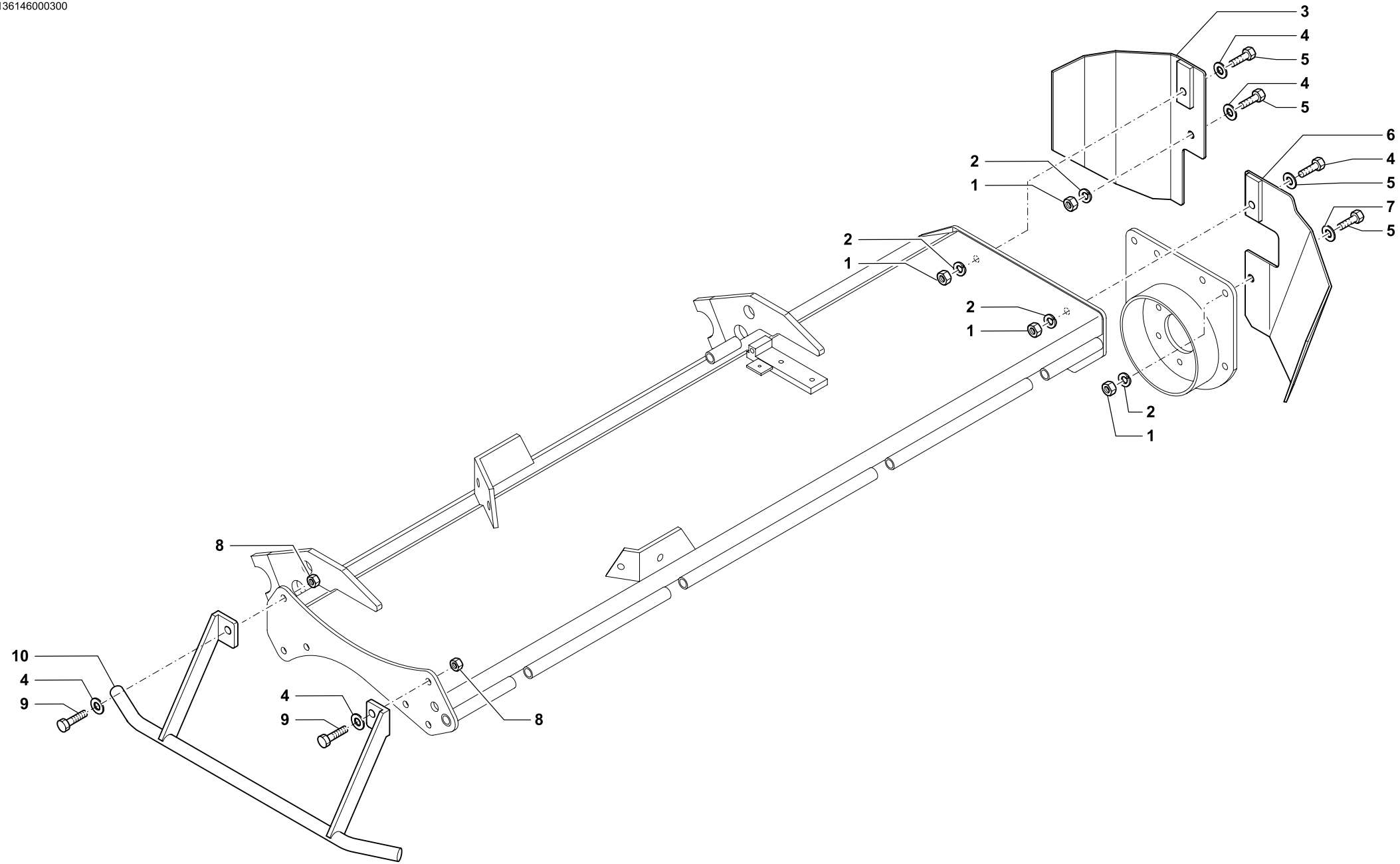


**PROTEZIONI ANTINFORTUNISTICHE • SAFETY PROTECTION**
**SICHERHEITSSCHUTZ • PROTECTION DE SECURITE**

| Tav. Tab. Taf. | 136146 | Rev. | 00 | 0300 |
|---|---|---|---|---|

| RIF. | N. CODICE | DENOMINAZIONE | DENOMINATION | BEZEICHNUNG | DENOMINATION |
|---|---|---|---|---|---|
| 1 | 004030 | Dado | Nut | Mutter | Ecrou |
| 2 | 011003 | Grower | Grower | Federscheibe | Grower |
| 3 | 913650 | Protezione anteriore DX | Protection | Schuetz | Protection |
| 4 | 010005 | Rondella | Washer | Unterlegscheibe | Rondelle |
| 5 | 014215 | Vite | Screw | Schraube | Vis |
| 6 | 913652 | Protezione posteriore DX | Protection | Schuetz | Protection |
| 7 | 014215 | Vite | Screw | Schraube | Vis |
| 8 | 004079 | Dado | Nut | Mutter | Ecrou |
| 9 | 014229 | Vite | Screw | Schraube | Vis |
| 10 | 913654 | Protezione SX | Protection | Schuetz | Protection |